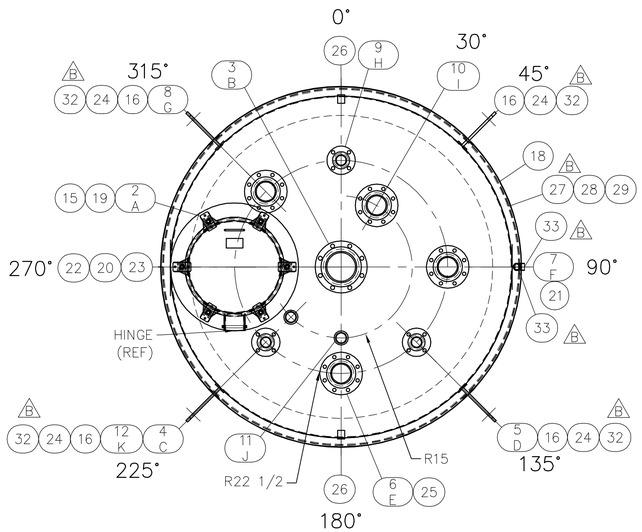

TOP HEAD AND SHELL ORIENTATION

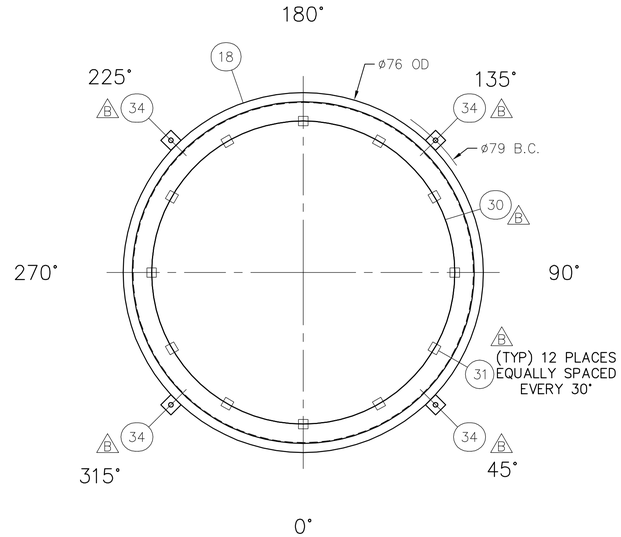

BOTTOM VIEW OF BOTTOM HEAD ORIENTATION

CUST NO.	ITEM NO.	NO. REQ'D	PART NO.	DESCRIPTION	DRAWING NO.
		1	V01	TANK ASSY MODEL F 1660 GAL	PC13816 D
	1	1	H01	HEAD ASSY TOP ASME F&D 71.75"ID 1874"THK 316 S/S 1.5"SF 5"IKR	
A	2	1	M20	MANWAY ASSY MC9 20" 316/316L 6 LUG W/5.937" COLLAR HRAP GB/GB FINISH	9501012 D
B	3	1	9829218	FLANGE SLIP-ON 6" W/EXT 8"OA 316L S/S 150# SCH 40 BF WELDS	
C	4	1	9829214	FLANGE SLIP-ON 2" W/EXT 8"OA 316L S/S 150# SCH 40 BF WELDS	9000690 B
D	5	1	F05W385754	FLANGE SLIP-ON 2" W/EXT 103.5"OA 316L S/S 150# SCH 40 BF WELDS	9000690 B
E	6	1	9829216	FLANGE SLIP-ON 4" W/EXT 8"OA 316L S/S #150 SCH 40 BUFF WELDS	
F	7	1	9829216	FLANGE SLIP-ON 4" W/EXT 8"OA 316L S/S #150 SCH 40 BUFF WELDS	
G	8	1	F08W385754	FLANGE SLIP-ON 4" W/EXT 103.5"OA 316L S/S #150 SCH 40 BUFF WELDS	
H	9	1	9829214	FLANGE SLIP-ON 2" W/EXT 8"OA 316L S/S 150# SCH 40 BF WELDS	9000690 B
I	10	1	9829216	FLANGE SLIP-ON 4" W/EXT 8"OA 316L S/S #150 SCH 40 BUFF WELDS	
J	11	1	3201082	COUPLING FULL 2"NPT 316L S/S 3000# SCREWED	
K	12	1	3201082	COUPLING FULL 2"NPT 316L S/S 3000# SCREWED	
	13	1	113W385754	HEAD BOTTOM ASME F&D 71.75"ID 1874"THK 316 S/S 1.5"SF 5"IKR	
	14	1	S01	SHELL ASSY 12GA 316 S/S	
	15	1	115W385754	PAD REINF MANWAY 3"WD X .1874"THK 316/316L S/S	
	16	4	116W385754	LUG MOUNTING PLATE .5"THK 304 S/S X 10"WD X 10"TALL W/ONE HOLE	NOTE #18
	17	1	117W385754	SKIRT .1875"THK 304 S/S X 12"WD X 72"OD	
	18	1	118W385754	RING BASE .5"THK 304 S/S X 6"WD X 76"OD	NOTE #11
	19	1	9829912	GASKET MANWAY .625"SQ 19.5" ID WHITE EPDM FDA APPVD 60 DURO +OR- 5	
	20	1	9851152	PLATE DATA "ASME" VESSEL&HTS 18-8 S/S 5.5"X4"X.048"THK ETCHED	
	21	1		PLATE NAME "MUELLER" ETCHED	
	22	1	9851480	PLATE DATA "MUELLER" 5.25"X3.75"X.003"THK FOIL	
	23	1		PERMANENT STAMPED SERIAL NUMBER	
	24	4	124W385754	DOUBLER .25" THK 304 S/S 2"X12"	DETAIL A
	25	1	125W385754	HARDWARE PKG FOR 4" FLANGE WITH BLIND FOR SPARE NOZZLE CONSISTING OF(9810515)(577P278744)(9851114)	
	26	2	9901061	LUG LIFTING SGL WALL .25"THK 304 S/S	9000476 B
B	27	2	127	RING MOUNTING JACKET .1875"THK X 1" BAR 304 S/S	
B	28	1	128	RING TOP JACKET .5"THK X 2" BAR ROLLED THE HARDWAY	
B	29	1	J01	JACKET OUTER CONTAINMENT 12GA 304 S/S	
B	30	1	130	HEAD FLAT 64" DIA 12GA 304 S/S	
B	31	12	131	TAB WELD 2" X 2" (SHOP SUPPLIED) 304 S/S	
B	32	4	132	ESCUTCHEON FLAT LUG SIDE 12GA 304 S/S 3"WD X 13"LG	
B	33	2	3201038	COUPLING FULL 1"NPT 304 S/S 150# SCREWED	
B	34	4	134	LUG MOUNTING .5"THK 304 S/S 3"WD X 3"LG W/1" DIA HOLE IN CENTER	DETAIL C

NOTES:

1. ALL MATERIALS OR COMPONENT PARTS CALLED OUT ON THIS DRAWING SHALL BE AS SPECIFIED "OR APPROVED EQUAL."
2. DIMENSIONS, UNLESS OTHERWISE INDICATED, ARE NOMINAL AND STANDARD SHOP TOLERANCES ARE TO BE EXPECTED. (ENPE 222) MEASUREMENTS FOR ANY FIELD ATTACHMENTS SHOULD BE VERIFIED ON SITE BY OTHERS BEFORE FABRICATION OF THE ATTACHMENTS.
3. CORROSION DISCLAIMER
   PAUL MUELLER COMPANY IS NOT RESPONSIBLE FOR CORROSION OR SUITABILITY FOR USE OF ANY MATERIAL IN ANY PARTICULAR APPLICATION ! THE CORROSION RESISTANCE AND SUITABILITY FOR USE OF A MATERIAL IS DEPENDENT ON OPERATING ENVIRONMENT AND CONDITIONS, CLEANING PRACTICES, AND MANY OTHER FACTORS BEYOND THE CONTROL OF THE EQUIPMENT FABRICATOR. THE USER OF THE EQUIPMENT BEARS TOTAL RESPONSIBILITY FOR CORROSION OR SUITABILITY FOR USE OF ALL MATERIALS IN THEIR PARTICULAR APPLICATION !
4. ALL FLANGES WILL HAVE BOLT HOLES STRADDLE THE 0°-180° & 90°-270° CENTER LINES, UNLESS SPECIFIED OTHERWISE.
5. VESSEL TO BE VENTED FOR SHIPMENT.
6. ALL DIMENSIONS ARE IN INCHES UNLESS SPECIFIED OTHERWISE.
7. ALL WELD SIZES ARE MINIMUM AFTER GRINDING.
8. CORROSION ALLOWANCE: 0 INCHES.
9. PRODUCT SPECIFIC GRAVITY: 1 .
10. VESSEL DESIGNED FOR WIND LOAD: 0 MPH.
11. CUSTOMER IS RESPONSIBLE FOR SEISMIC DESIGN AND ANCHORAGE.
12. CUSTOMER TO PROVIDE SUFFICIENT PIPE SUPPORT & PIPING EXPANSION JOINT TO PREVENT EXTERNAL NOZZLE LOADS.
13. FOR DYE TEST REQUIREMENTS SEE PROCEDURE ENG 103

CERTIFIED BY
PAUL MUELLER COMPANY
VESSEL

DIV.1	MAWP	30	P.S.I. at	100	°F
	MAEWP	.09	P.S.I. at	100	°F
W	MDMT	-20 °F at	30	P.S.I.	
	SERIAL NUMBER	393558-1			
	YEAR BUILT	2008			

HEAT TRANSFER SURFACE

MAWP		P.S.I. at	°F
MAEWP		P.S.I. at	°F
MDMT	°F at		P.S.I.

NOTE #14

MUELLER

MATERIAL FINISHES

INTERIOR	2B/HRAP	EXTERIOR	2B/HRAP

WEL FINISHES

INTERIOR	BUFF (BF)
EXTERIOR	BUFF (BF)

SPECIFICATIONS
VESSEL

CODE: ASME

RADIOGRAPHY

Top Head	Top Head To Shell	Shell	Bottom Head	Bottom Head To Shell
NONE	NONE	NONE	NONE	NONE

HEAT TRANSFER

CODE:

RADIOGRAPHY

Top Head	Top Head To Shell	Shell	Bottom Head	Bottom Head To Shell

SIZE (GALLONS) - MODEL	SERIAL NUMBER
1660 GAL F	393558-1

VESSEL INFORMATION

DESIGN PRESSURE	30	PSI	DESIGN TEMP.	100	°F
HYDRO TEST PRESSURE	40	PSI	DESIGN VACUUM	.09	PSI

HEAT TRANSFER INFORMATION

DESIGN PRESSURE		PSI	DESIGN TEMP.		°F
TEST PRESSURE		PSI	VOLUME		CU. FT.
MEDIUM	HEATING / COOLING				

EST. EMPTY WEIGHT = 3000 LBS

SCALE 3/4"=12" (DO NOT SCALE THIS DRAWING)

DRAWN BY	L. OCONNOR	DATE	9/9/2008
REVIEWED BY		DATE	9/9/2008
REVIEWED BY		DATE	
APPROVED BY		DATE	9/11/2008

SOLD TO: DAYSTAR TECHNOLOGIES INC.
ADDRESS: SANTA CLARA, CA
CUSTOMER ORDER NO. 203080

TITLE: 1660 GALLON MODEL "F" CHEMICAL TANK

QUANTITY: ONE

This drawing and any print thereof is the property of the PAUL MUELLER CO., Springfield, Mo., and is subject to return on request of this company.The information shown is confidential and the recipient by accepting this drawing agrees not to use any information contained thereon in any manner which will be detrimental to the PAUL MUELLER CO.

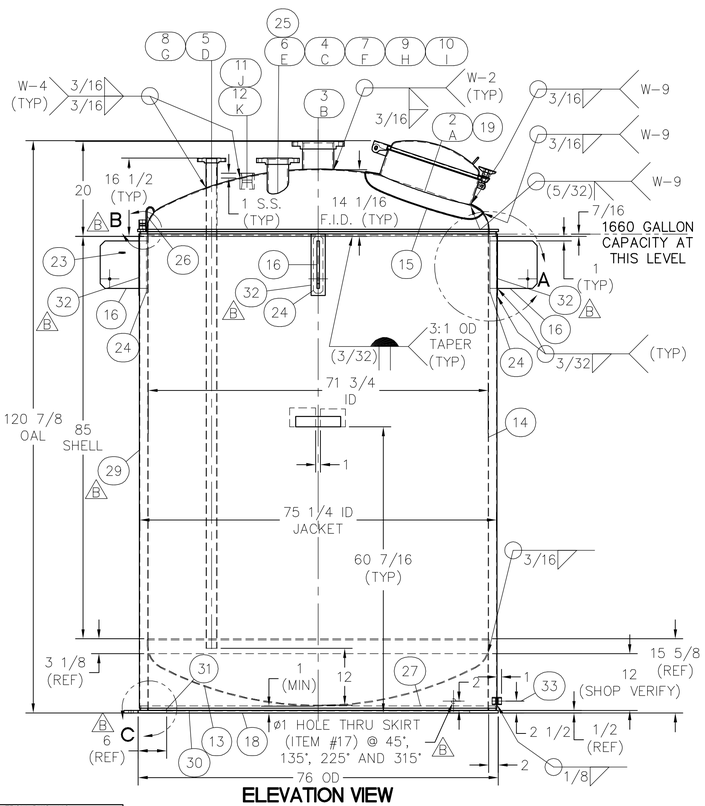

ELEVATION VIEW

SEE TOP & BOTTOM HEAD VIEWS FOR TRUE ORIENTATION

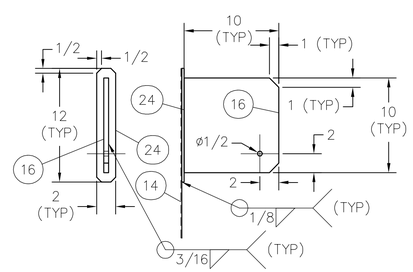

DETAIL A

MGF = 2

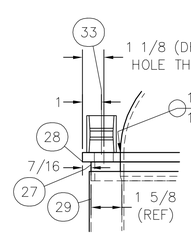

DETAIL B

MGF = 4

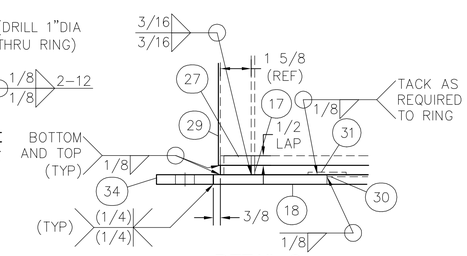

DETAIL C

MGF = 4

NOTES CONT:

14. ASME DATA PLATE "RT" MARKING PER UG116(e) WHEN APPLICABLE.
15. MATERIAL SPECIFICATIONS FOR ASME
    S/S SHEET AND PLATE (SA-240)
    S/S ROD AND BAR (SA-479)
    S/S PIPE (SA-312)
    S/S TUBE (SA-213)
    S/S BOLTS (SA-193 GR. B8)
    S/S NUTS (SA-194 GR. 8)
    316 S/S NUTS (SA-194 GR. 8M)
    S/S FORGINGS (SA-182)
    S/S COUPLINGS (UG-11) OR (SA-182)
16. ASME CODE JURISDICTION ENDS AT THE FIRST SEALING SURFACE EXCLUDING MANWAY.
17. ALL WELDING TO BE DONE BY ASME CERTIFIED WELDERS.
18. CUSTOMER SKETCHED ANCHORAGE PLATES ARE GOOD FOR 470 LBS OF DOWNWARD LOAD AND 100 LBS OF OUTWARD LOAD.
19. SHIPPING NOTE: DIP TUBES @ NOZZLES 5/D & 8/G MUST BE BRACED FOR SHIPPING.
20. PASSIVATE TANK PER QAGN 700 EXCEPT USE CITRIC ACID.
21. CONTAINMENT JACKET HOLDS 10% OF THE TOTAL VOLUME ALLOWING A VESSEL FAIL VOLUME OF 110%.

CERTIFIED CORRECT AND RELEASED FOR FABRICATION

FABRICATION WILL BE IN ACCORDANCE WITH THIS DRAWING. ANY FURTHER CHANGES WILL BE REVIEWED FOR COST AND DELIVERY ADJUSTMENTS.

PAUL MUELLER COMPANY

SYM.	CHANGE	BY	DATE
B	ADDED ITEMS #27-34**ADDED DETAILS B &C** ADDED NOTE #21**	DEP	10/14/2008
A	ADDED CERTIFIED STAMP**REVISED CUSTOM PART NUMBERS**	LOC	9/11/2008

REVISIONS

10/17/2008 LOC 09/11/08

MUELLER
P. O. BOX 828 / SPRINGFIELD, MISSOURI 65801-0828, U.S.A.

SEPIA FROM DWG. NO. PC13711

SALES ORDER & SERIAL NO. 393558 -1

DRAWING NO. PC13816 D